34. Calculate: (FIG 11)

a. CT:

b. XCT

FIG 11

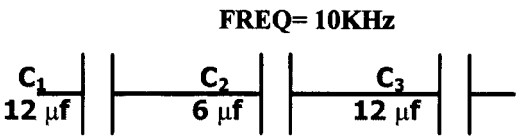

35. Calculate: (FIG 12)

a. CEQ:

b. XCEQ:

FIG 12

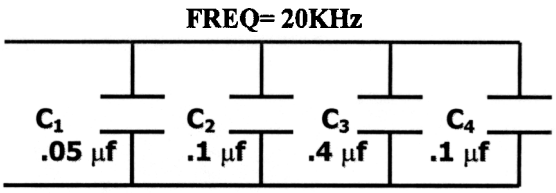

36. Calculate: (FIG 12)

a. CEQ: _____

b. C_T: _____

c. X_{CEQ}: ___

d. X_{CT}: _____

e. Z: _____

f. E_{CEQ}: _____

FIG 12

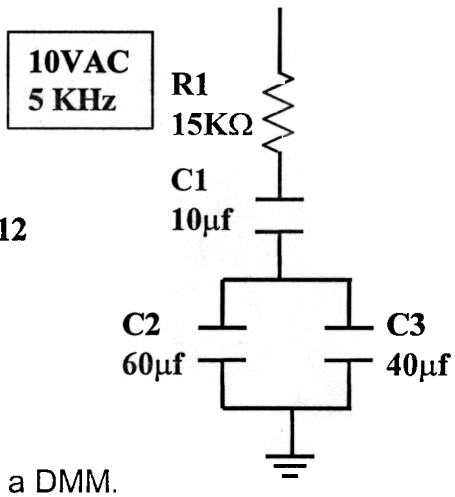

37. T or F You can measure capacitive reactance with a DMM.

38. What happens to capacitive reactance when frequency increases?

39. Calculate: (FIG 13)

a. X_{L1}:

b. X_{C1}: _____

c. Z: _____

FIG 13

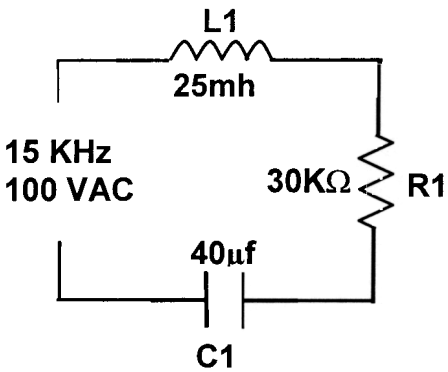

40. What is the formula for impedance in an LCR circuit?

41. What is the phase relation between E_C and E_L?