42. Calculate:

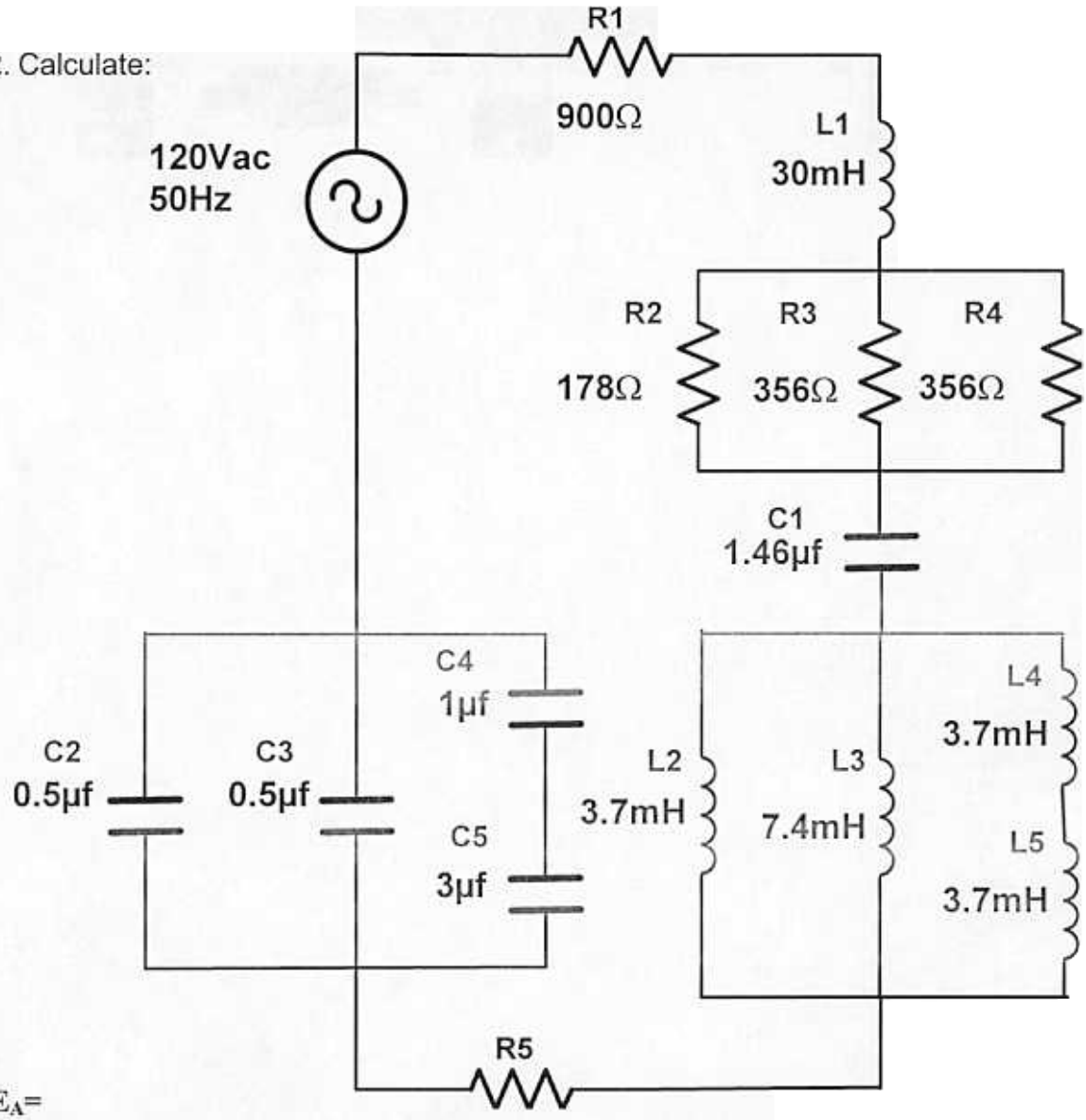

E_A=
FREQ=
X_{CEQ}=
X_{CT}=
X_{LEQ}=
X_{LT}=
REQ=
R_T=
Z=
I_T=
E_{R1}=
E_{REQ}=
E_{R5}=
E_{L1}=
E_{ljEQ}=
E_{C1}=
E_{CEQ}=

CEQ=
X_{C1}=

LEQ=
X_{L1}=

I_{R2}=
I_{R3}=
I_{R4}=